PT9301

Heavy Industrial • Position/Velocity Output

Linear Position/Velocity to 550 inches (1400 cm)
Aluminum or Stainless Steel Enclosure Options
VLS Option To Prevent Free-Release Damage
IP68 • NEMA 6 Protection • Hazardous Area Certification

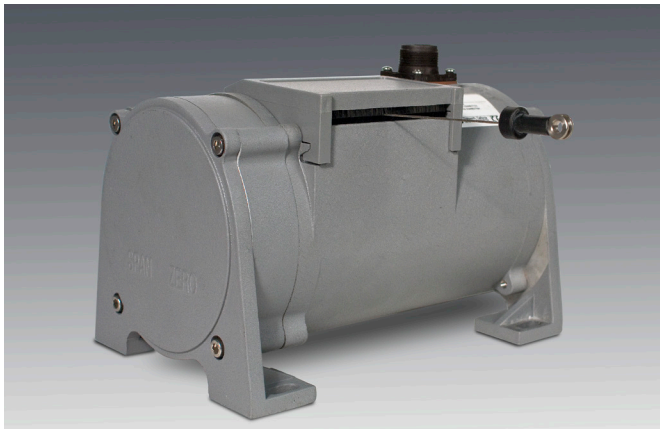

GENERAL

Full Stroke Range Options (on this datasheet)	0-75 to 0-550 inches
Measuring Cable Options	stainless steel or thermoplastic
Enclosure Material	powder-painted aluminum or 303 stainless steel
Sensor, Position	plastic-hybrid precision potentiometer
Sensor, Velocity	DC tach generator
Maximum Retraction Acceleration	see ordering information
Maximum Velocity	see ordering information
Weight, Aluminum (Stainless Steel) Enclosure	8 lbs. (16 lbs.) max.

POSITION

Output Signal	voltage divider (potentiometer)
Accuracy	± 0.10% full stroke
Repeatability	± 0.02% full stroke
Resolution	essentially infinite
Sensor, Position	plastic-hybrid precision potentiometer
Potentiometer Cycle Life	≥250,000
Input Resistance Options	500, 1K, 5K or 10K Ω (see ordering information)
Power Rating, Watts	2.0 at 70°F derated to 0 at 250°F
Recommended Maximum Input Voltage	30V (AC/DC)
Output Signal Change Over Full Stroke Range	94% ±4% of input voltage

VELOCITY

Output Signal	DC tachometer output
Linearity	better than ±0.10% of output at any velocity
Repeatability	±0.10% of reading
Sensor	tach generator
Input Voltage	none required
Output Voltage @ 100 inches per minute	361 mV ±3%
Output Impedance	350 ohms ±10%
Output Ripple (for velocity ≥ 1.29 inches per second)	±3% rms

ENVIRONMENTAL

Enclosure	NEMA 4/4X/6, IP 67/68
Operating Temperature	-40° to 200°F (-40° to 90°C)
Vibration	up to 10 g to 2000 Hz maximum

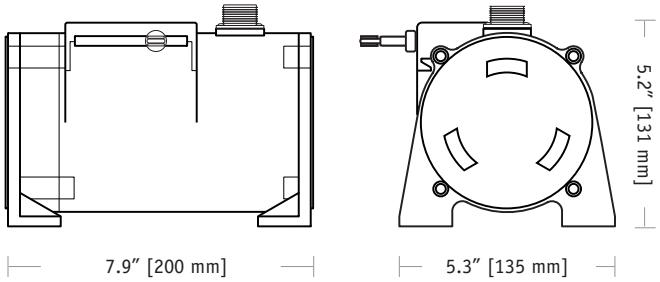

The PT9301 is a combination position and velocity transducer for demanding long-range applications requiring a linear position measurements in ranges up to 1700". A precision plastic-hybrid potentiometer provides accurate position feedback while a self-generating DC tachometer provides a velocity signal that is proportional to the speed of the traveling stainless-steel measuring cable.

As a member of Celesco's innovative family of NEMA-4 rated cable-extension transducers, the PT9301 offers numerous benefits. It installs in minutes, functions properly without perfectly parallel alignment, and when its cable is retracted, it measures only 6".

Output Signal:

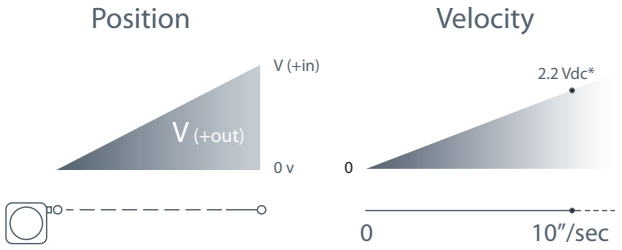

**velocity output rate = 361 mV ± 3% @ 100 inches per min.*

20630 Plummer Street • Chatsworth, CA 91311
tel: 800.423.5483 • +1.818.701.2750 • fax: +1.818.701.2799
measurement SPECIALTIES™
celesco
celesco.com • info@celesco.com

Fig. 1 – Outline Drawing (18 oz. cable tension only)

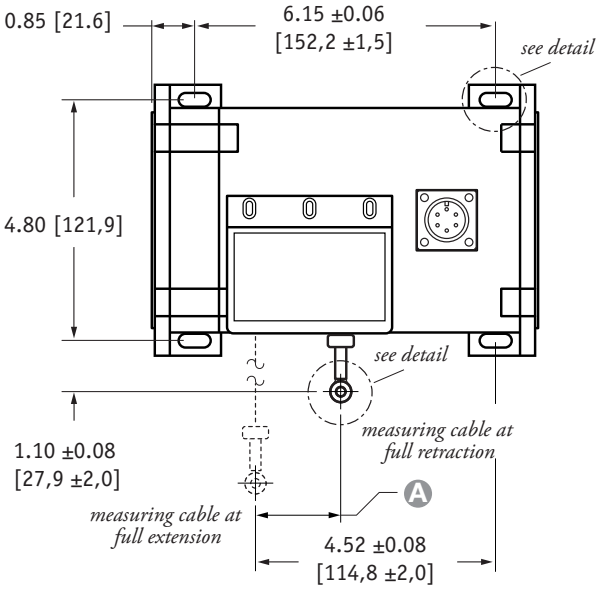

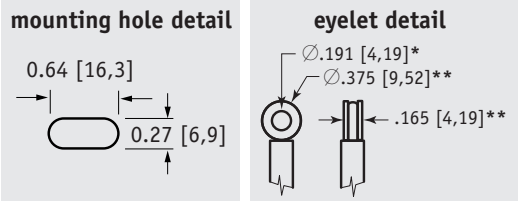

A DIMENSION (INCHES)

RANGE	MEASURING CABLE ∅.031 in.	∅.034 in.	∅.047 in.	∅.062 in.
75	n/a	0.22	0.29	0.37
100	n/a	0.29	0.39	0.49
150	n/a	0.44	0.59	0.73
200	n/a	0.58	0.79	0.98
250	n/a	0.73	0.98	1.22
300	n/a	0.88	1.18	1.47
350	n/a	1.02	1.38	1.71
400	n/a	1.17	1.57	1.96
450	n/a	1.31	1.77	n/a
500	n/a	1.46	1.97	n/a
550	1.61	1.61	n/a	n/a

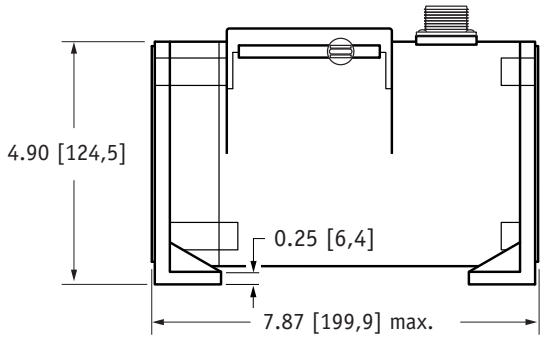

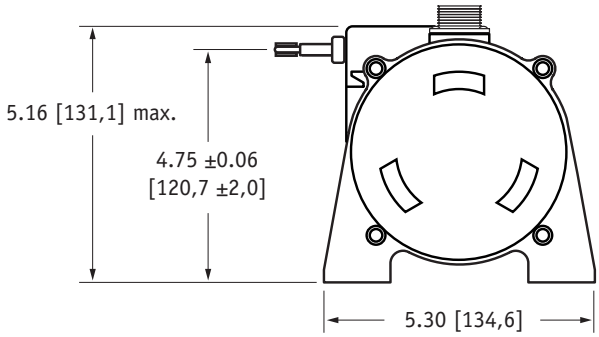

DIMENSIONS ARE IN INCHES [MM]
tolerances are 0.03 IN. [0.5 MM] unless otherwise noted.

* tolerance = +.005 –.001 [+.13 –.03]
** tolerance = +.005 –.005 [+.13 –.13]

Ordering Information:

Model Number:

PT9301- ____ - ___ ___ ___ - ___ 1 ___ 0
order code: R A B C D E F G

Sample Model Number:

PT9301 - 0500 - 111 - 1110

R	range:	500 inches
A	enclosure/cable tension:	aluminum/18 oz.
B	measuring cable:	.034 nylon-coated stainless
C	cable exit:	front
D	output signal:	500 ohm position / DC tachometer velocity
F	electrical connection:	6-pin plastic connector

Full Stroke Range:

R order code:	0075	0100	0150	0200	0250	0300	0350	0400	0450*	0500*	0550*
full stroke range, min:	75 in.	100 in.	150 in.	200 in.	250 in.	300 in.	350 in.	400 in.	450 in.	500 in.	550 in.

** – 36 oz. cable tension strongly recommended*

Ordering Information (cont.):

Enclosure Material and Measuring Cable Tension:

Ⓐ order code:	1	3	2	4
tension (±30%):	18 oz.		36 oz.	
enclosure material:	*powder-painted aluminum*	*303 stainless steel*	*powder-painted aluminum*	*303 stainless steel*
max. acceleration:	1 G	.33 G	5 G	2 G
max. velocity:	60 inches/sec	20 inches/sec	200 inches/sec	80 inches/sec

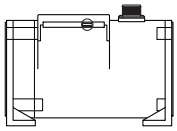

standard housing
see fig 1.

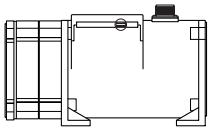

dual-spring housing
see fig 2.

Measuring Cable:

Ⓑ order code:	1	2	3	4
	∅.034-inch nylon-coated stainless steel	∅.047-inch stainless steel	∅.062-inch thermoplastic	∅.031-inch stainless steel
	*available in **all** ranges*	*all ranges up to **500 inches***	*all ranges up to **400 inches***	***550 inch** range only*

Cable Exit:

Ⓒ order code:	1	2	3	4
	front	top	back	down

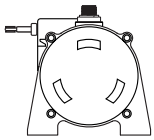

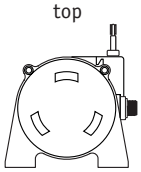

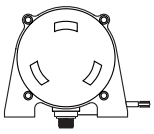

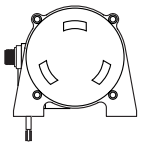

Output Signals:

Ⓓ order code:	1	2	3	4
position sensing potentiometer:	500 ohms*	1000 ohms*	5000 ohms*	10,000 ohms*

position sensing circuit

value specified by ordercode

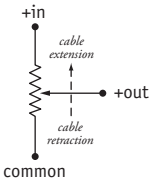

velocity sensing circuit

**–tolerance = ±10%*

Electrical Connection:

Ⓕ order code:	1	3	4
	6-pin plastic connector with mating plug	6-pin metal connector with mating plug	25-ft. instrumentation cable 24 AWG, shielded
	IP 67, NEMA 4X*,6	**IP 65, NEMA 4**	**IP 67, NEMA 6**

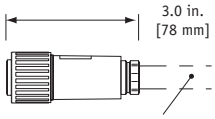

1/2 - 5/16" [14 - 8 mm] cable dia.
16 AWG max conductor size
connector: MS3102E-14S-6P
mating plug: MS3106E-14S-6S

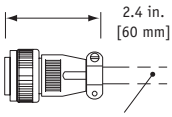

3/8-in. [9 mm] max cable dia.
16 AWG max conductor size
connector: MS3102E-14S-6P
mating plug: MS3106E-14S-6S

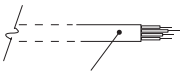

25 ft. x 0.2-in. dia.
[7,5 M x 5 mm dia.]
24 AWG, shielded

6-pin mating plug:

pin	signal	
A	+ in	*position*
B	common	*position*
C	+ out	*position*
D	-	
E	+ out	*velocity*
F	- out	*velocity*

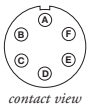

contact view

25-ft. instrumentation cable:

color	signal	
red	+ in	*position*
black	common	*position*
green	+ out	*position*
white	+ out	*velocity*
brown	- out	*velocity*

** –applies to stainless steel enclosure only*

Fig. 2 – Outline Drawing (36 oz. cable tension only)

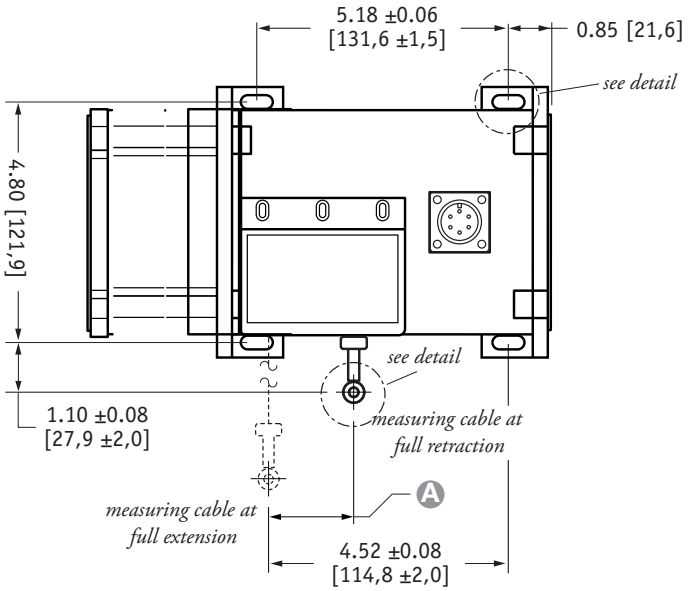

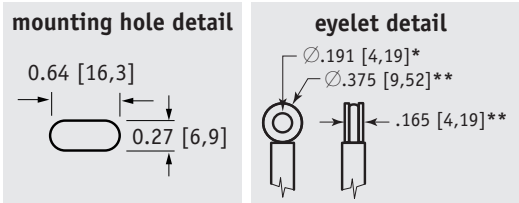

A DIMENSION (INCHES)

RANGE	MEASURING CABLE ∅.031 in.	∅.034 in.	∅.047 in.	∅.062 in.
75	n/a	0.22	0.29	0.37
100	n/a	0.29	0.39	0.49
150	n/a	0.44	0.59	0.73
200	n/a	0.58	0.79	0.98
250	n/a	0.73	0.98	1.22
300	n/a	0.88	1.18	1.47
350	n/a	1.02	1.38	1.71
400	n/a	1.17	1.57	1.96
450	n/a	1.31	1.77	n/a
500	n/a	1.46	1.97	n/a
550	1.61	1.61	n/a	n/a

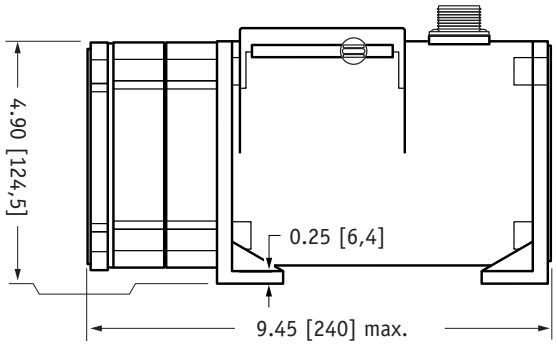

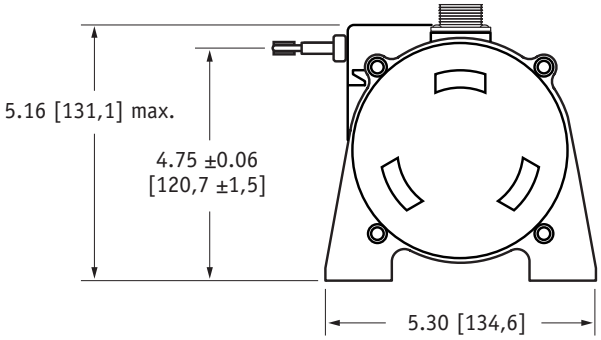

DIMENSIONS ARE IN INCHES [MM]
tolerances are 0.03 IN. [0.5 MM] unless otherwise noted.

* tolerance = +.005 –.001 [+.13 –.03]
** tolerance = +.005 –.005 [+.13 –.13]

VLS Option - Free Release Protection

The patented Celesco Velocity Limiting System (VLS) is an option for PT9000 Series cable extension transducers that limits cable retraction to a safe 40 to 55 inches per second for the single spring option and 40 to 80 inches per second for the higher tension dual spring option.

The VLS option prevents the measuring cable from ever reaching a damaging velocity during an accidental free release. This option is ideal for mobile applications that require frequent cable disconnection and reconnection. It prevents expensive unscheduled downtime due to accidental cable mishandling or attachment failure.

How To Configure Model Number for VLS Option:

VLS9301 - ____ - ____ ____ ____ - ____ ____ ____ ____
(R) (A) (B) (C) (D) (E) (F) (G)

creating VLS model number (example)...

1. select PT9301 model — **PT9301-0100-111-1110**
2. remove "PT" from the model number — **~~PT~~ 9301-0100-111-1110**
3. add "VLS" — **VLS + 9301-0100-111-1110**
4. completed model number ! — **VLS9301-0100-111-1110**

version: **7.0** last updated: **August 15, 2013**

celesco
celesco.com • info@celesco.com
tel: 800.423.5483 • +1.818.701.2750 • fax: +1.818.701.2799
now part of Measurement Specialties, Inc.